Appendix A Electrical schematics

Figure 27 to *Figure 30* show the electrical schematics of the STM32 Nucleo-64 board.

Figure 27. Top and Power

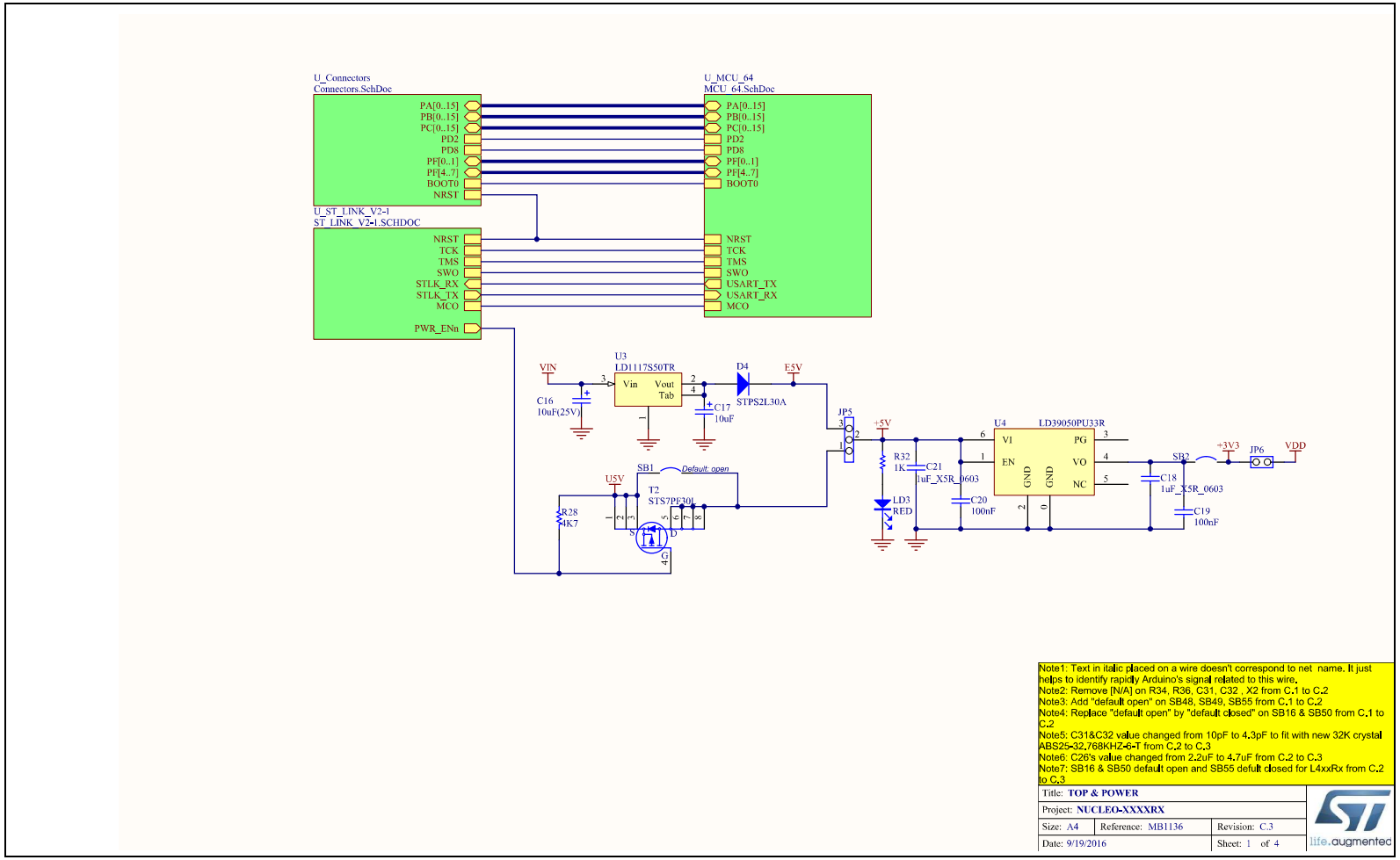

Figure 28. STM32 MCU

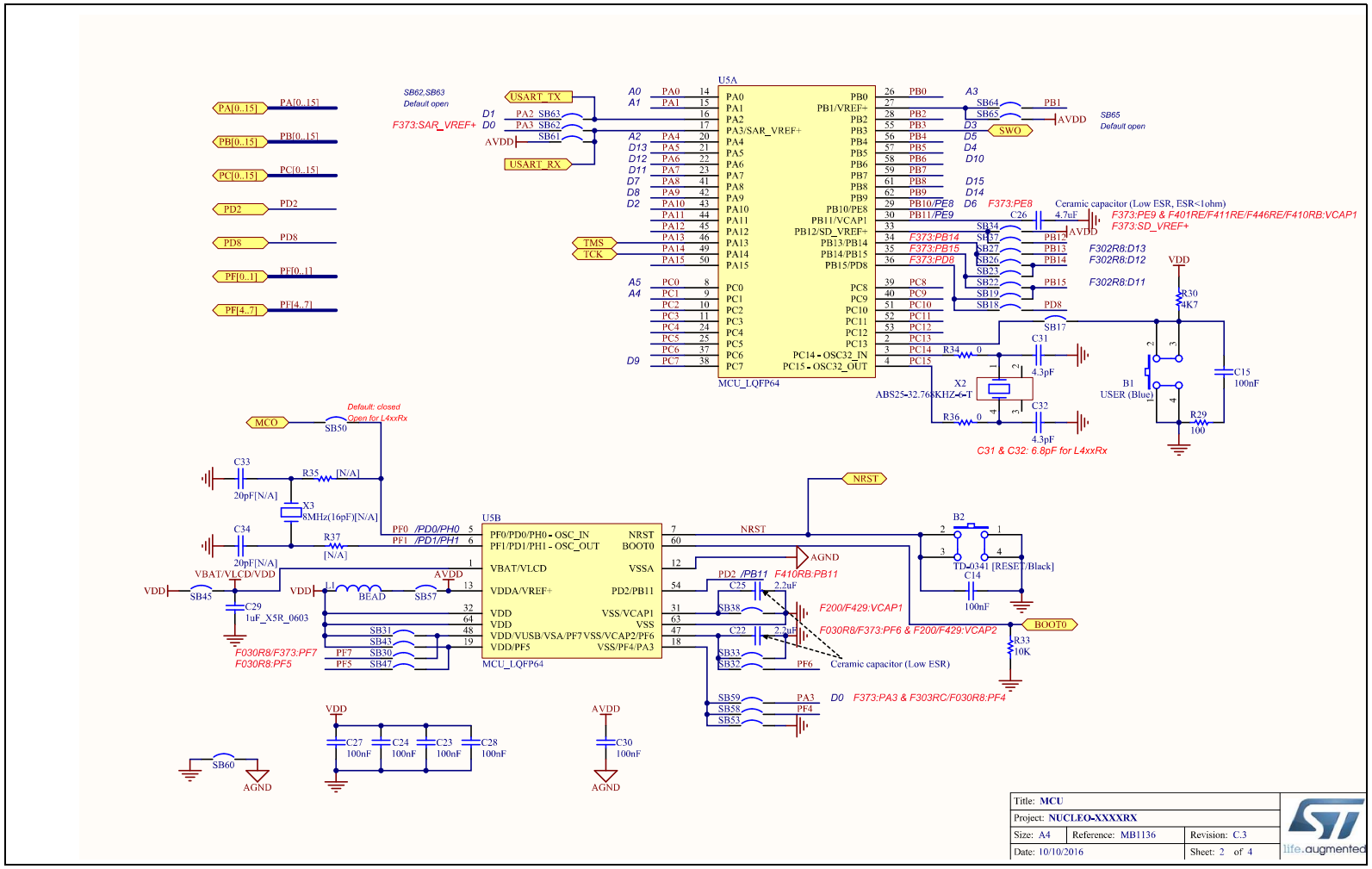

Figure 29. ST-LINK/V2-1

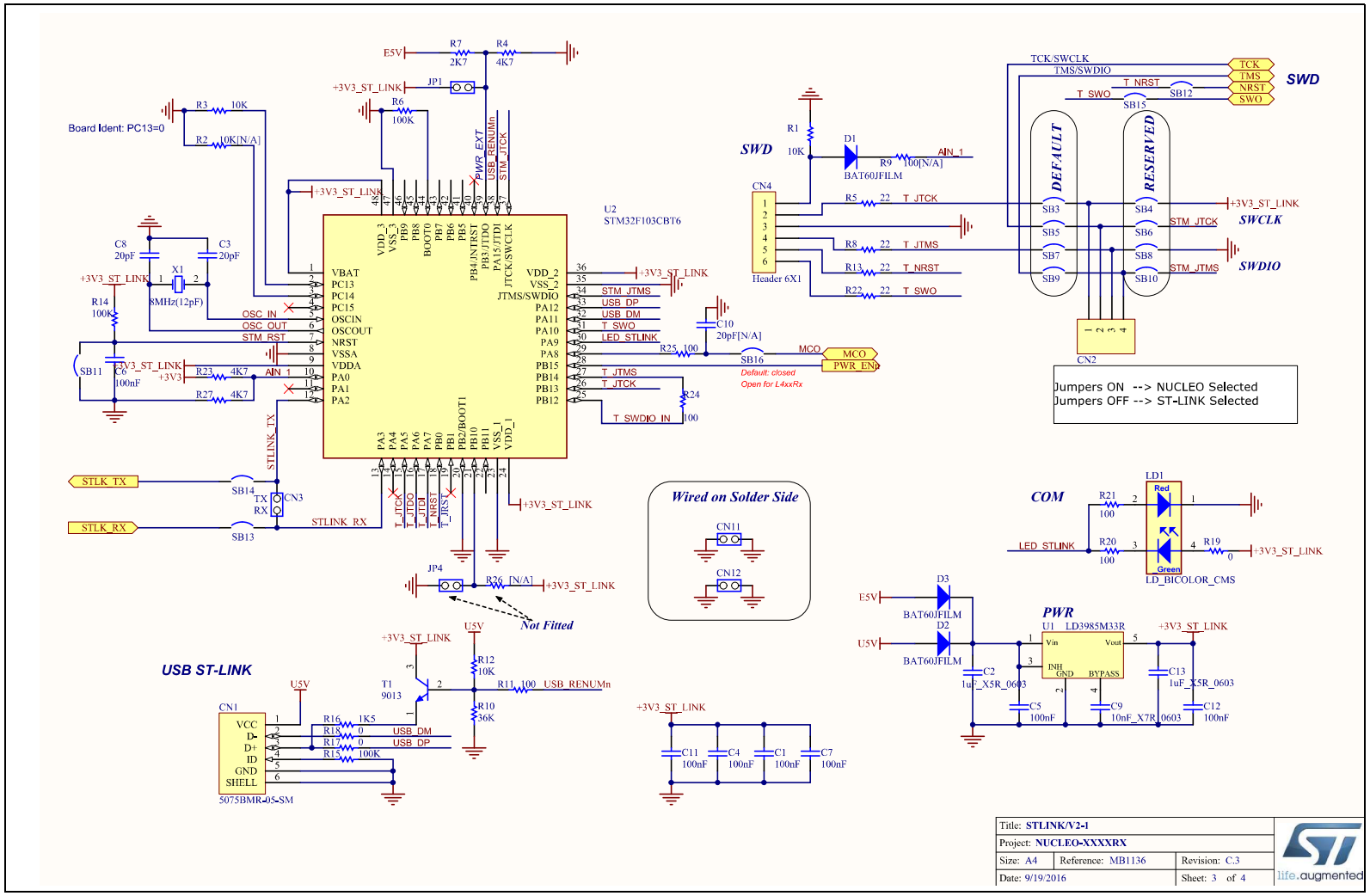
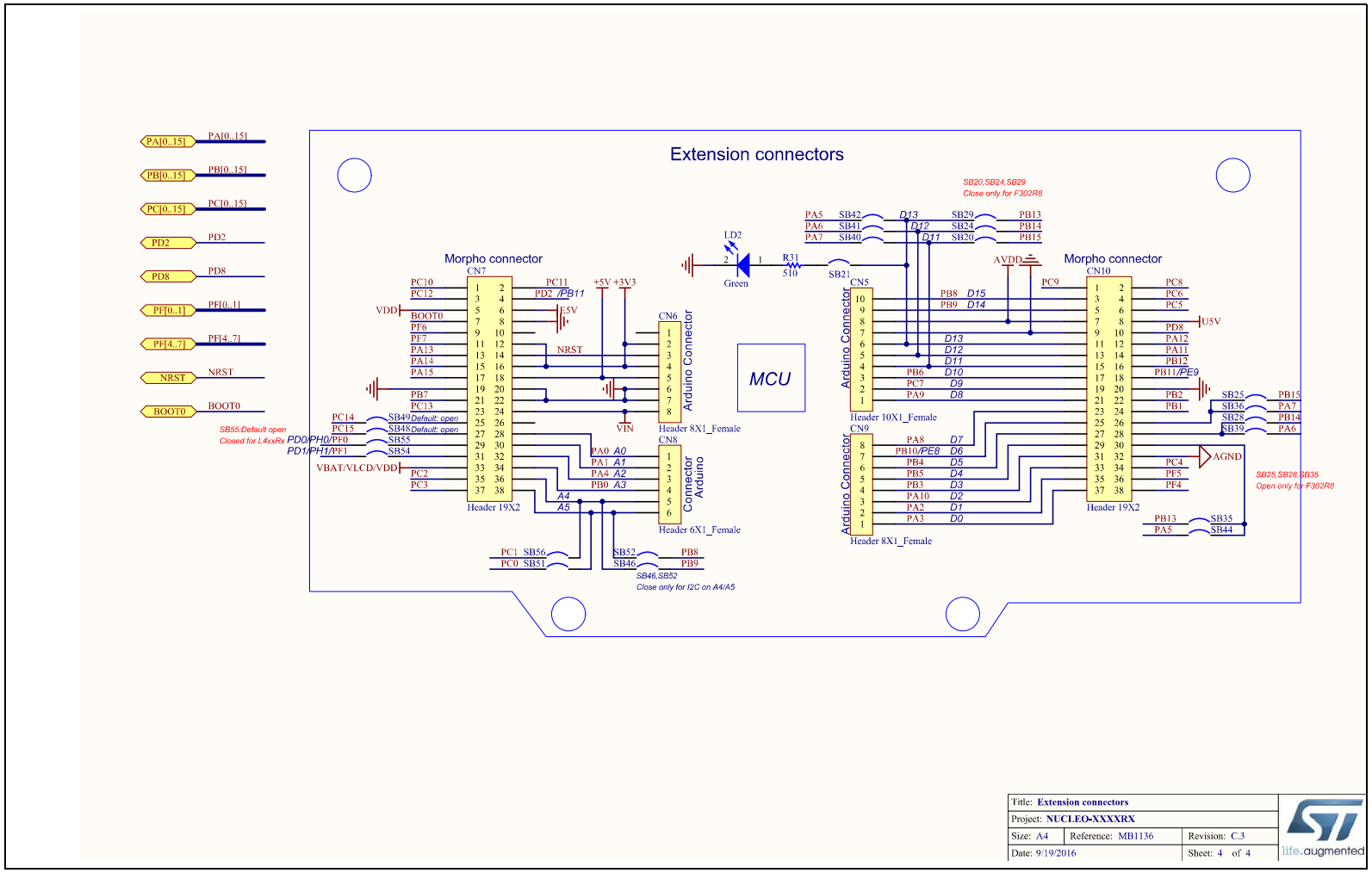
Figure 30. Extension connectors